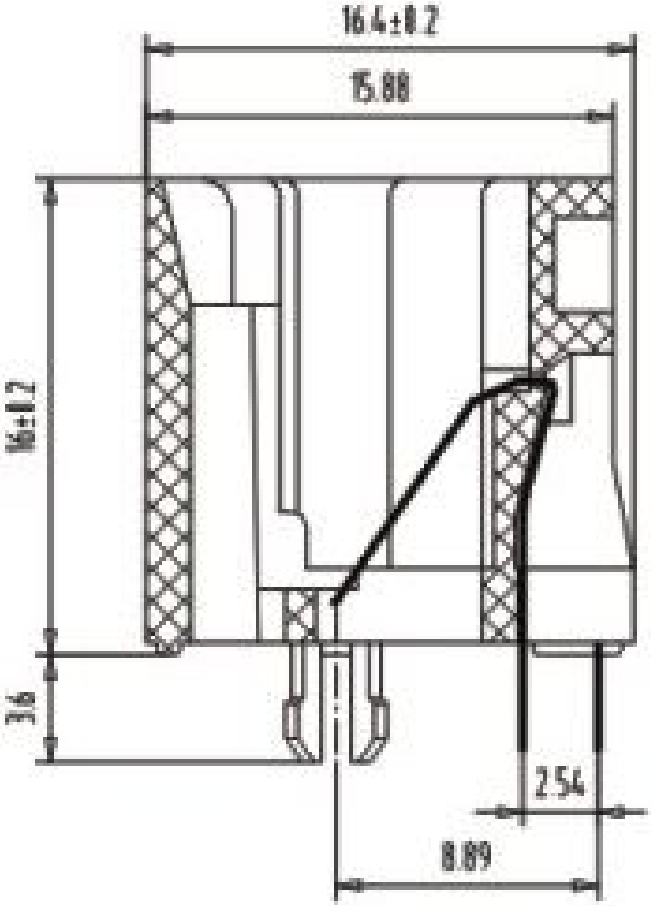
16.4±0.2
15.88
16±0.2
3.6
2.54
8.89

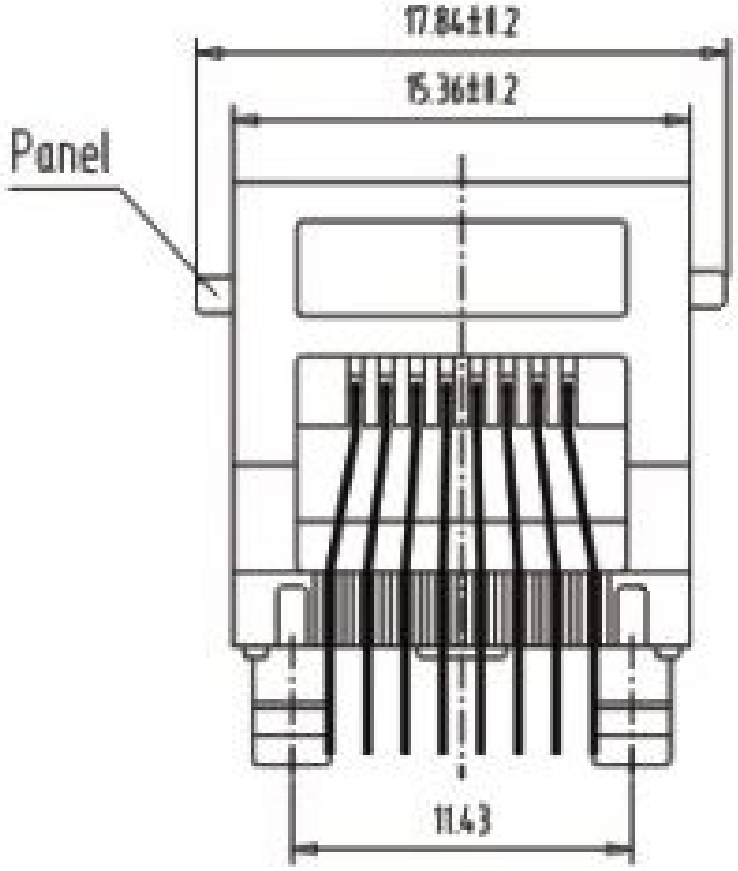
17.84±0.2
15.36±0.2
Panel
11.43

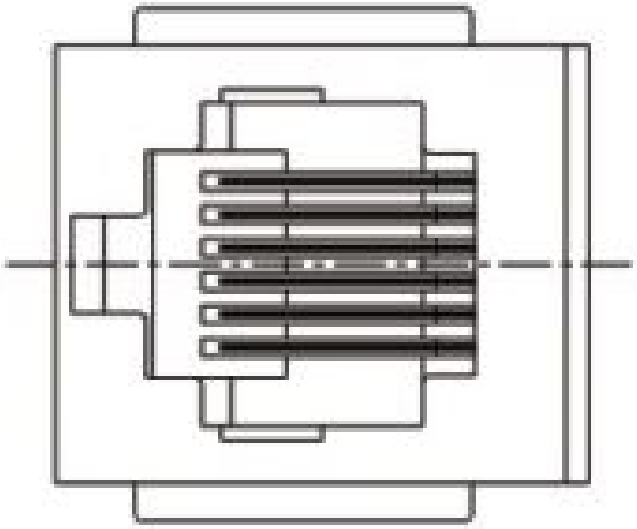

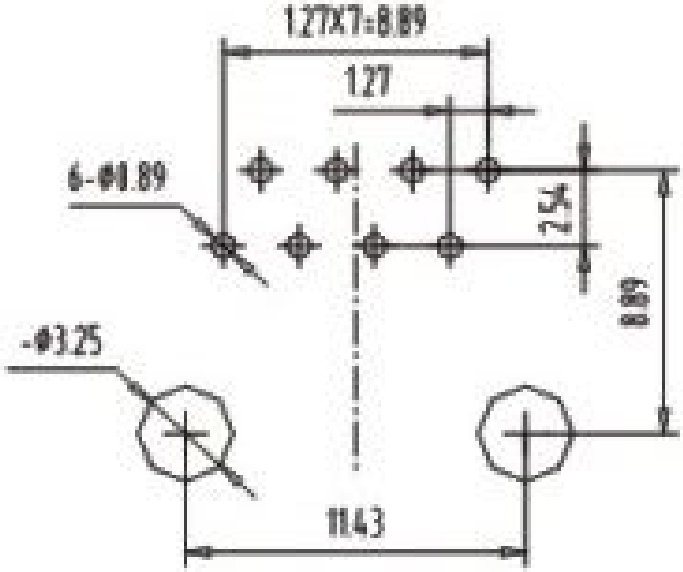
1.27X7=8.89
1.27
6-Φ1.89
2.54
8.89
-Φ3.25
11.43

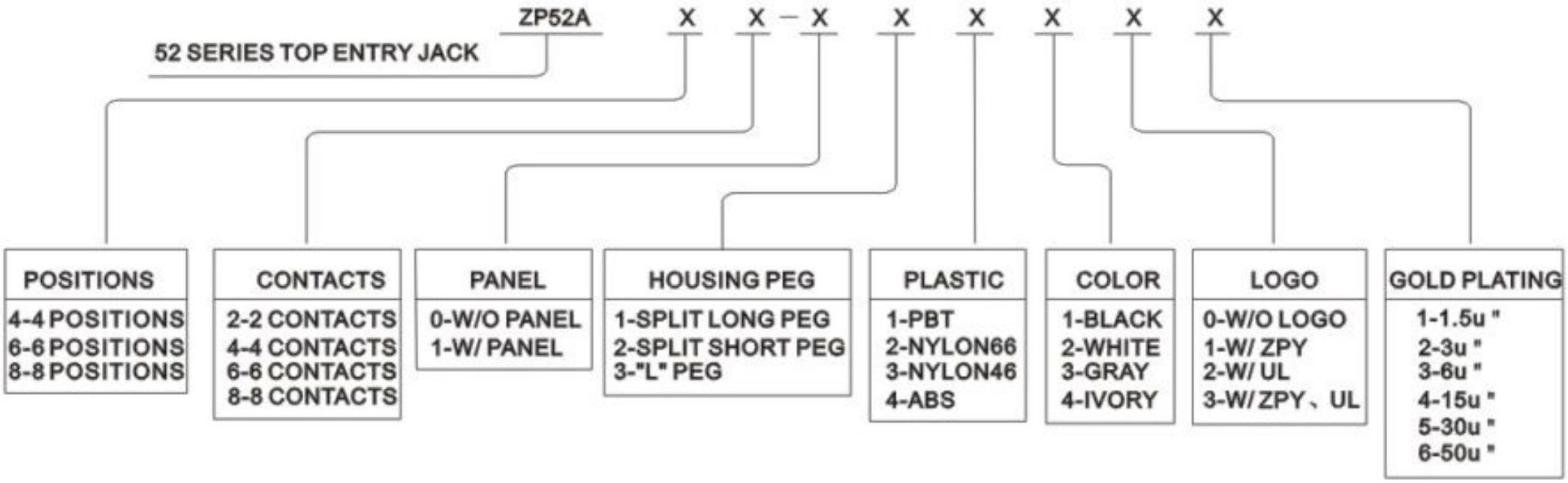
ZP52A X X – X X X X X X
52 SERIES TOP ENTRY JACK
POSITIONS
4-4 POSITIONS
6-6 POSITIONS
8-8 POSITIONS
CONTACTS
2-2 CONTACTS
4-4 CONTACTS
6-6 CONTACTS
8-8 CONTACTS
PANEL
0-W/O PANEL
1-W/ PANEL
HOUSING PEG
1-SPLIT LONG PEG
2-SPLIT SHORT PEG
3-"L" PEG
PLASTIC
1-PBT
2-NYLON66
3-NYLON46
4-ABS
COLOR
1-BLACK
2-WHITE
3-GRAY
4-IVORY
LOGO
0-W/O LOGO
1-W/ ZPY
2-W/ UL
3-W/ ZPY、UL
GOLD PLATING
1-1.5u "
2-3u "
3-6u "
4-15u "
5-30u "
6-50u "

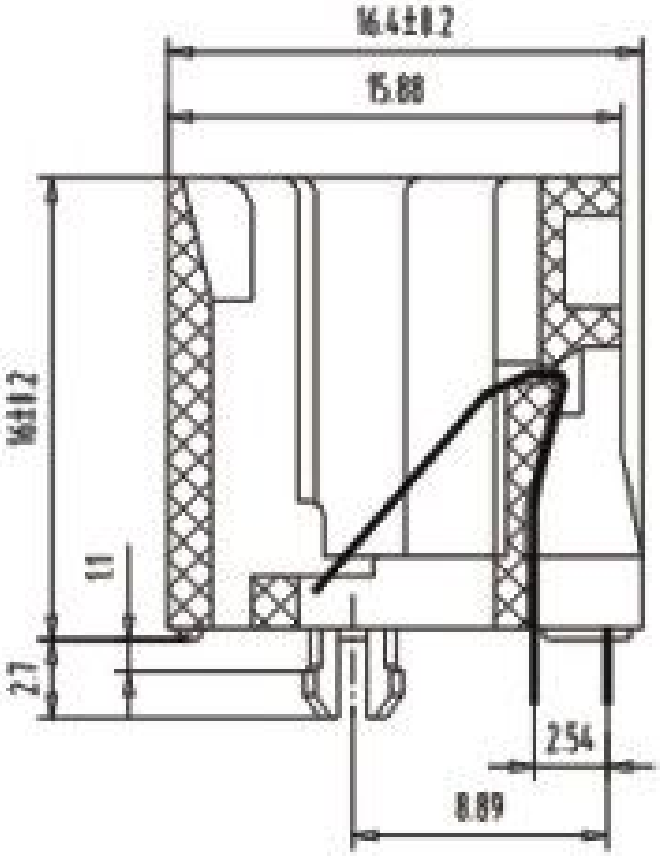
16.4±0.2
15.88
16±0.2
11
2.7
2.54
8.89

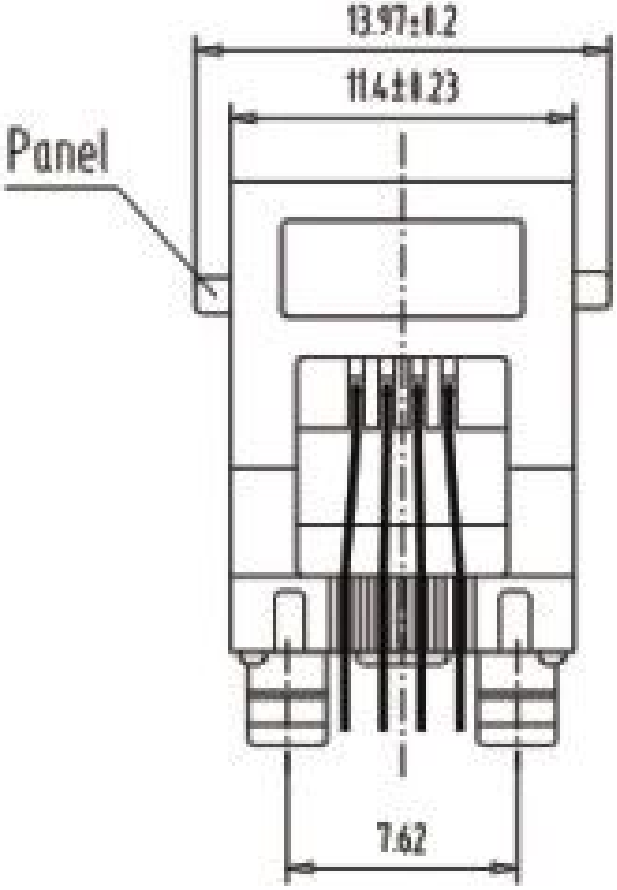
13.97±0.2
11.4±0.23
Panel
7.62

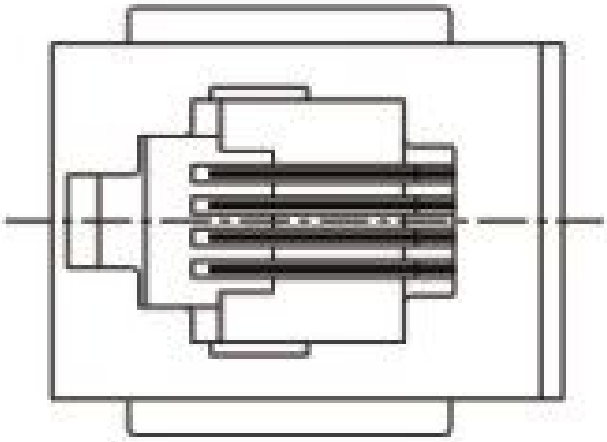

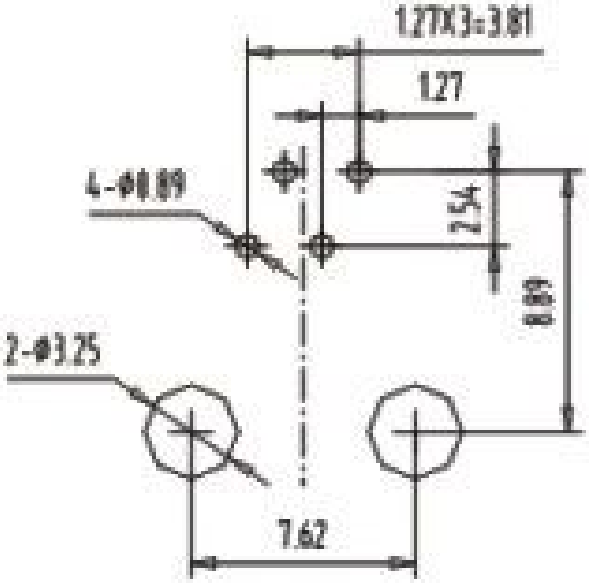
1.27X3=3.81
1.27
4-Φ0.89
2.54
8.89
2-Φ3.25
7.62

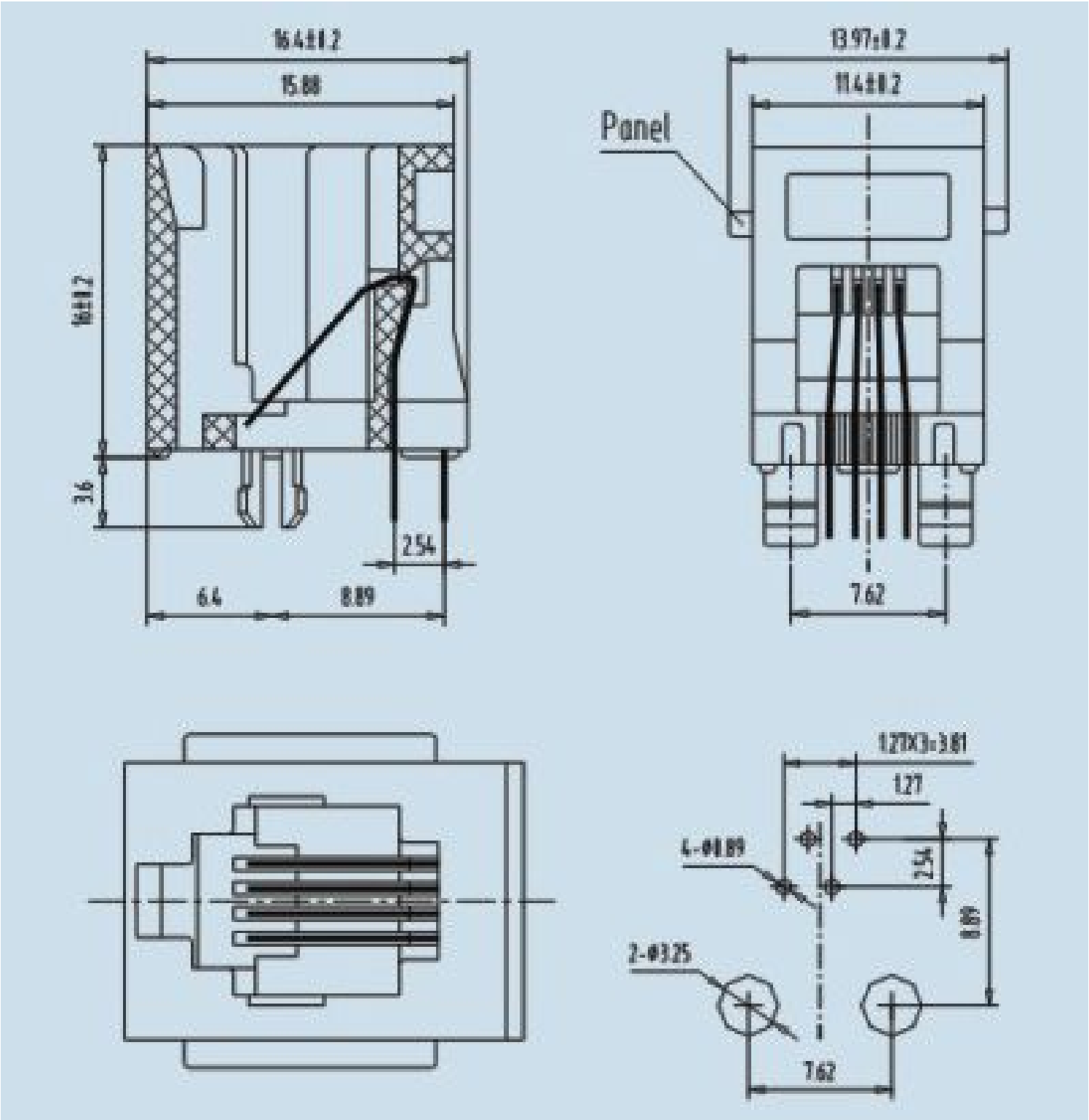
16.4±0.2
15.88
16±0.2
3.6
2.54
6.4
8.89
13.97±0.2
11.4±0.2
Panel
7.62
1.27X3=3.81
1.27
4-Φ0.89
2.54
8.89
2-Φ3.25
7.62

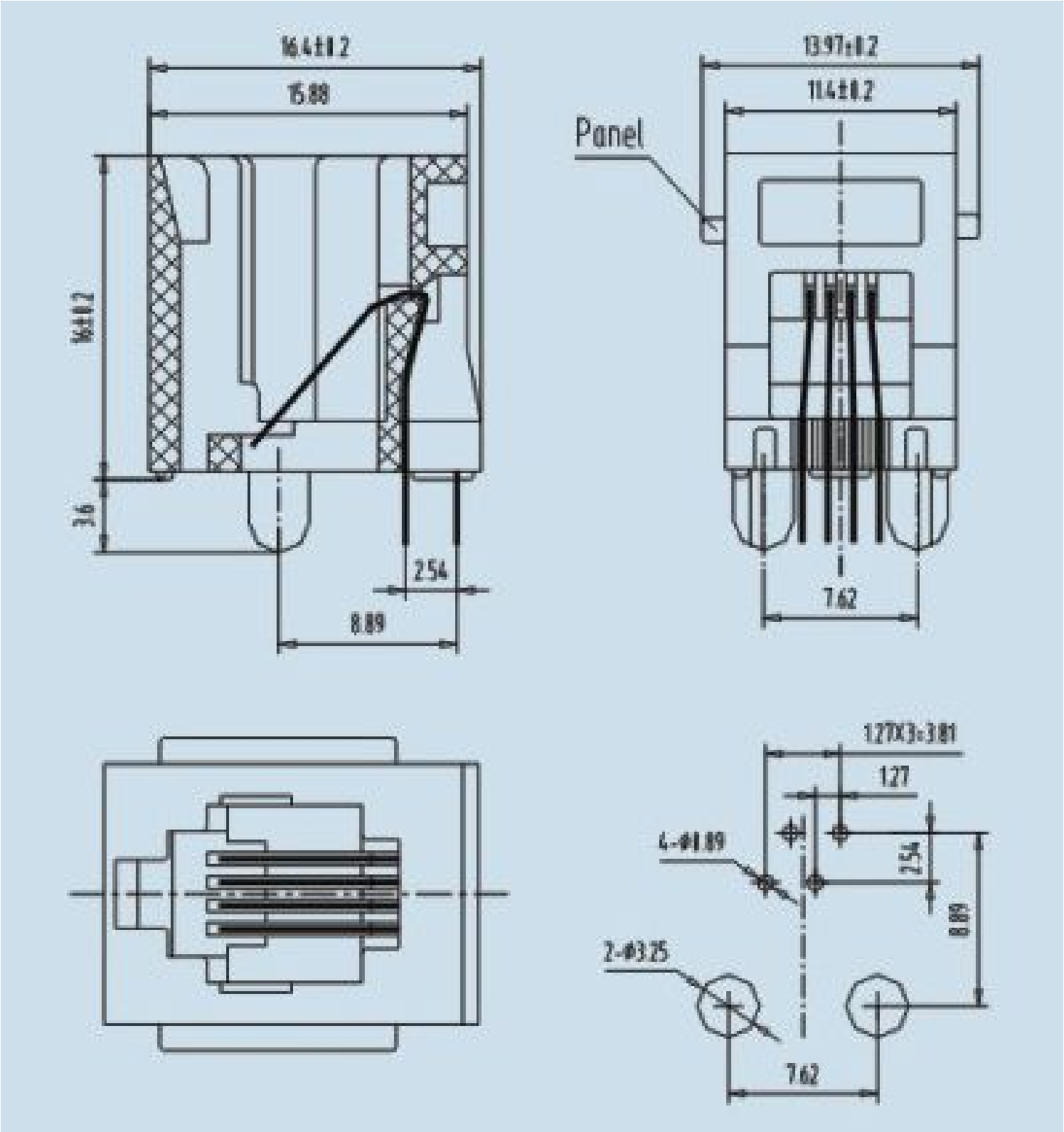
16.4±0.2
15.88
16±0.2
3.6
2.54
8.89
13.97±0.2
11.4±0.2
Panel
7.62
127X3=381
1.27
4-Φ1.89
2.54
8.89
2-Φ3.25
7.62

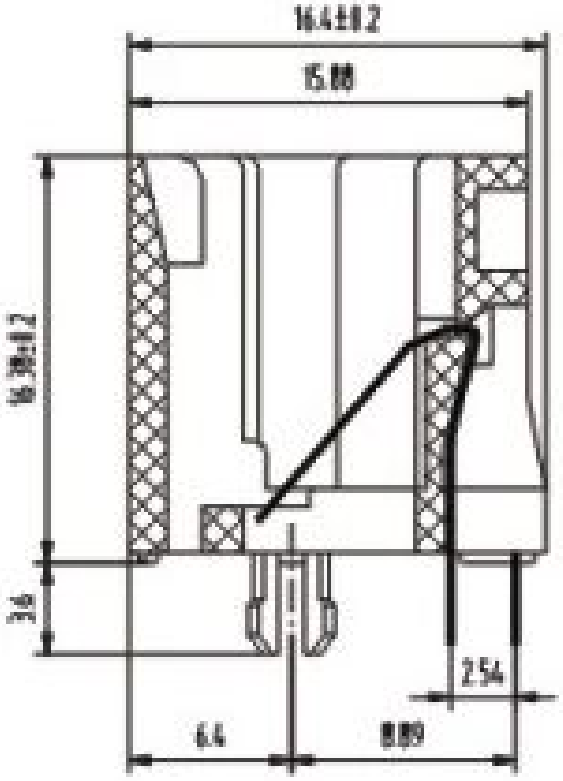
16.4±0.2
15.00
16.38±0.2
3.6
2.54
6.4
8.89

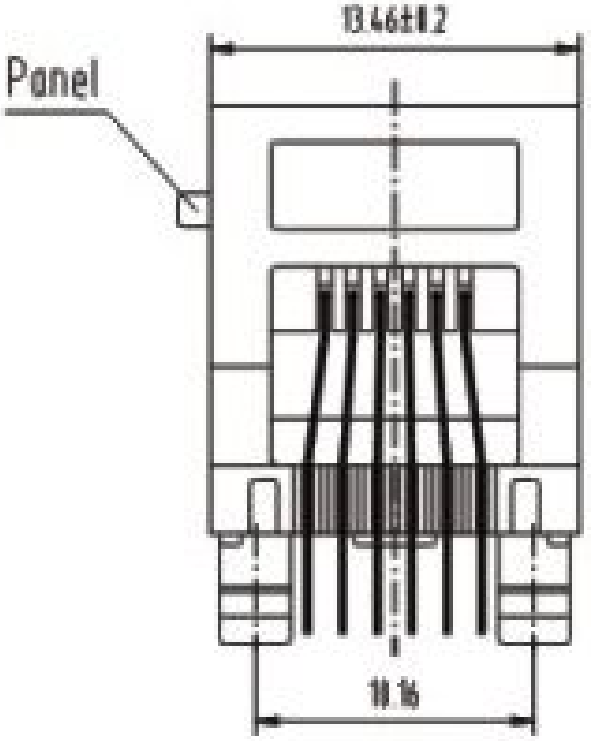
13.46±0.2
Panel
10.16

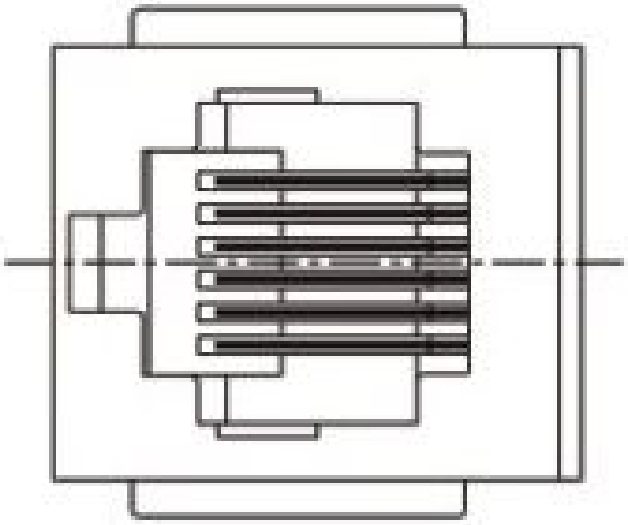

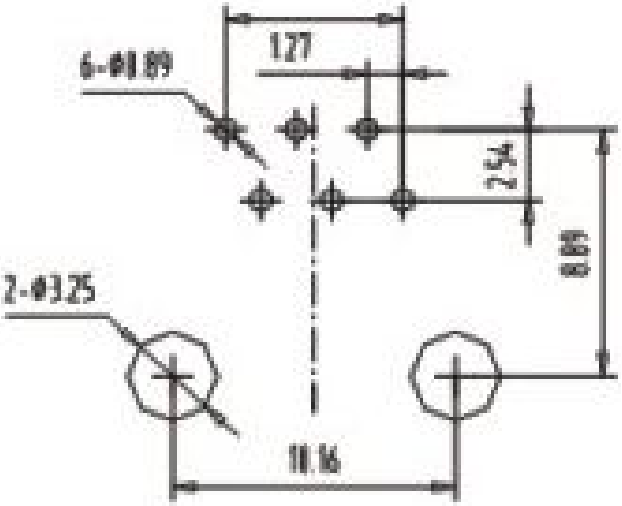
6-Ø1.89
1.27
2.54
8.89
2-Ø3.25
10.16

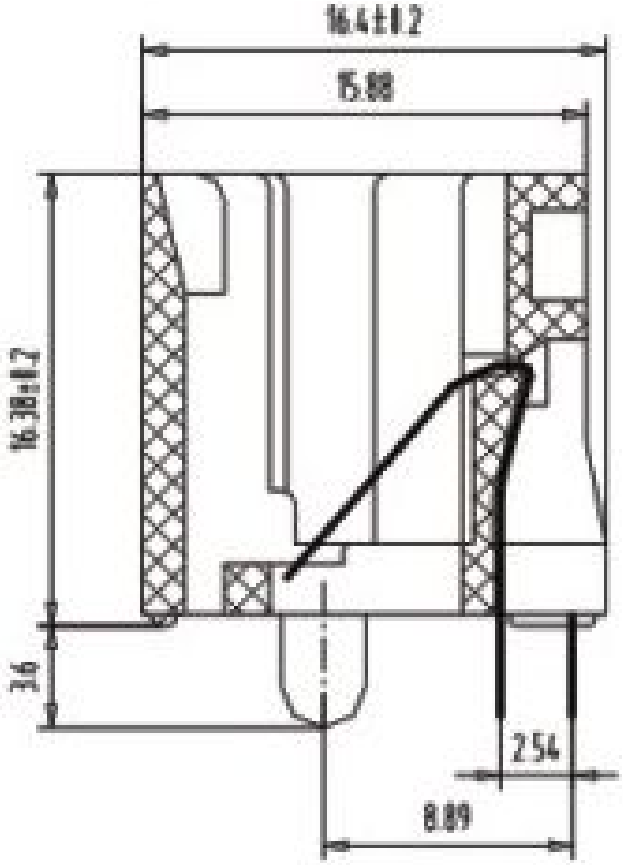
16.4±0.2
15.88
16.38±0.2
3.6
2.54
8.89

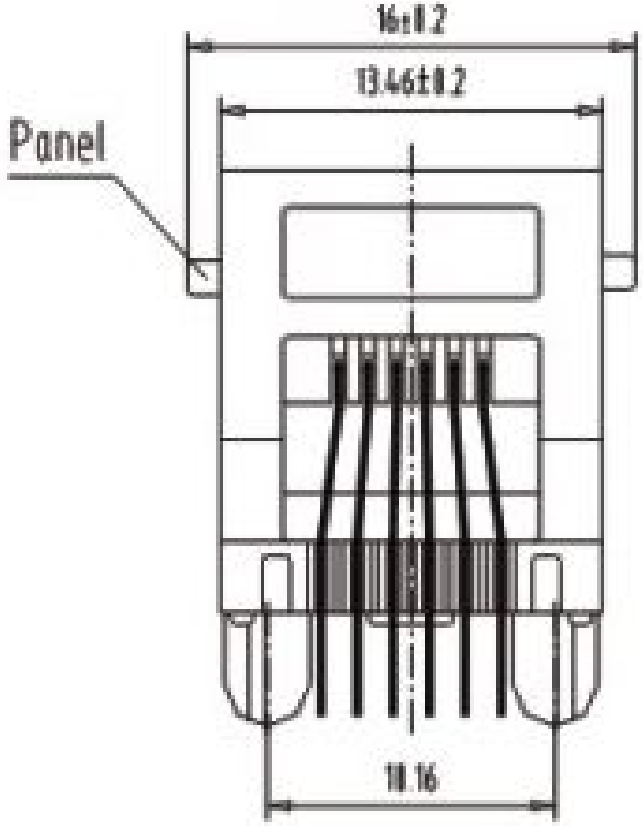
16±0.2
13.46±0.2
Panel
18.16

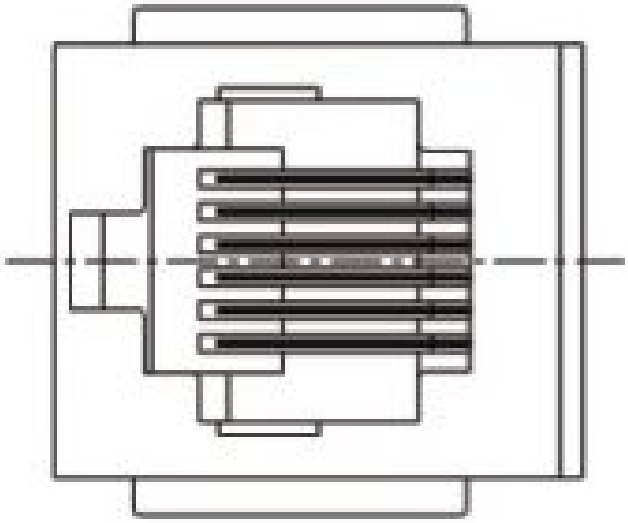

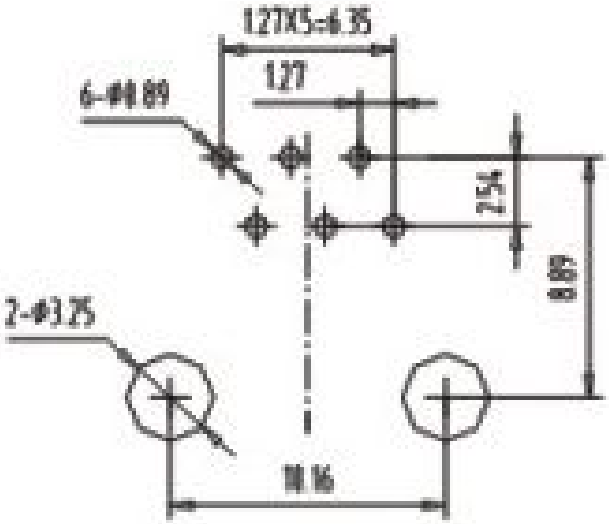
1.27X5=6.35
1.27
6-φ0.89
2.54
8.89
2-φ3.25
18.16

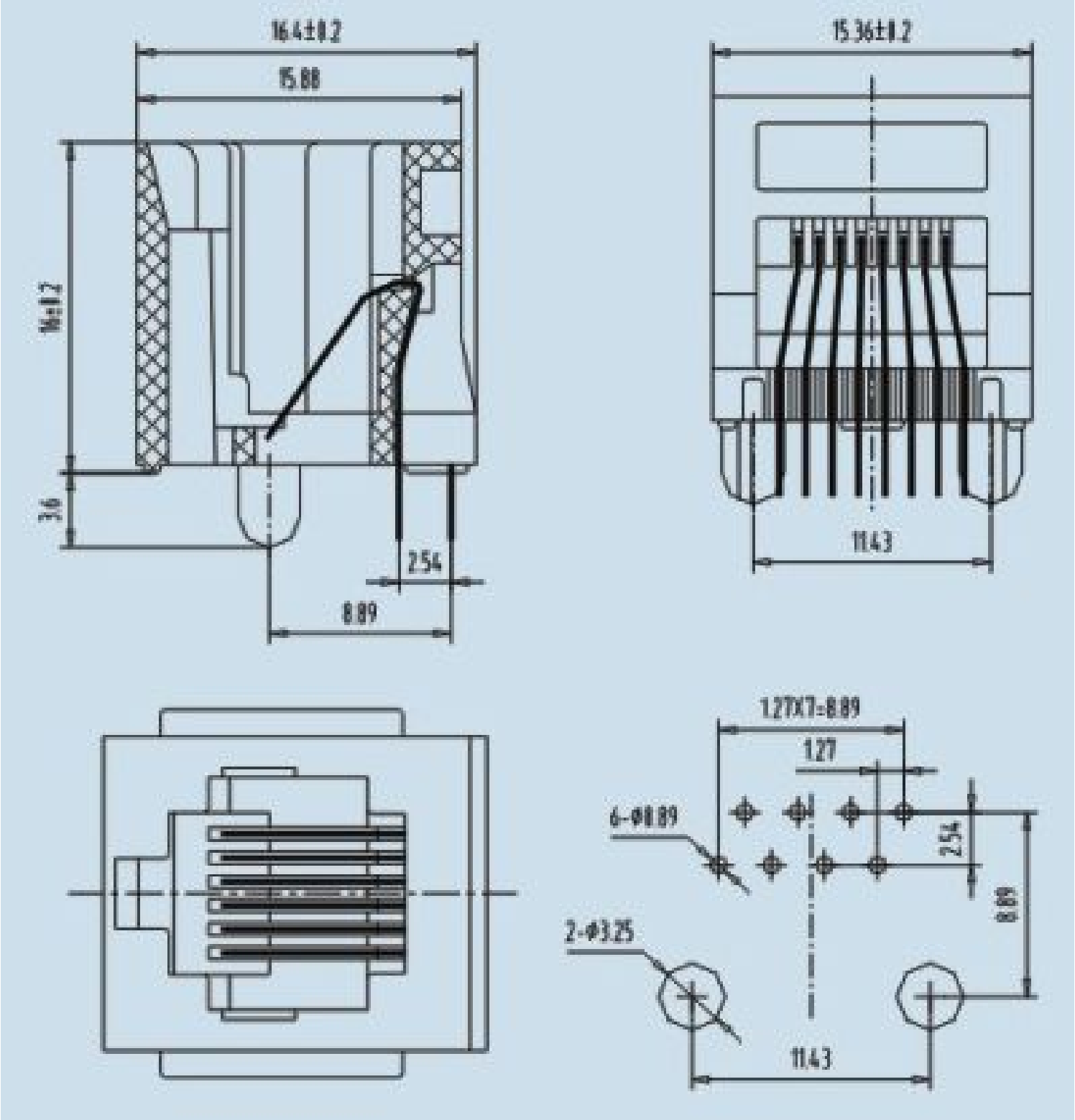
16.4±0.2
15.88
16±0.2
3.6
2.54
8.89
15.36±0.2
11.43
1.27X7=8.89
1.27
6-Φ0.89
2.54
8.89
2-Φ3.25
11.43