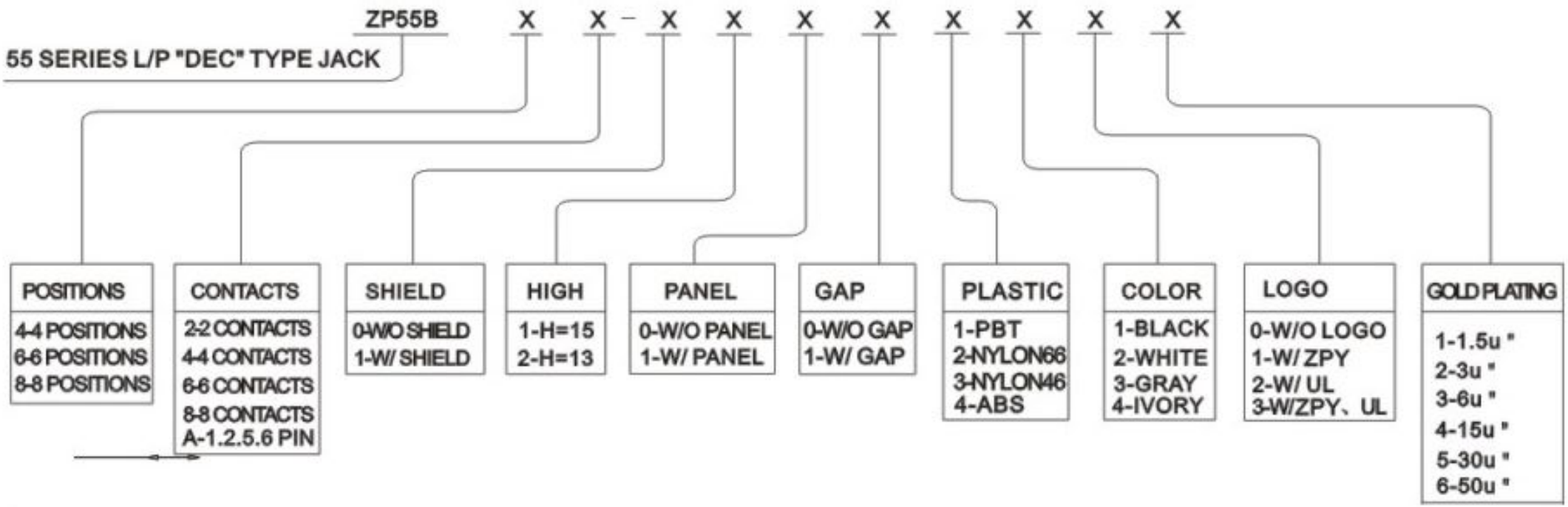
ZP55B X X - X X X X X X X X
55 SERIES L/P "DEC" TYPE JACK
POSITIONS
4-4 POSITIONS
6-6 POSITIONS
8-8 POSITIONS
CONTACTS
2-2 CONTACTS
4-4 CONTACTS
6-6 CONTACTS
8-8 CONTACTS
A-1.2.5.6 PIN
SHIELD
0-W/O SHIELD
1-W/ SHIELD
HIGH
1-H=15
2-H=13
PANEL
0-W/O PANEL
1-W/ PANEL
GAP
0-W/O GAP
1-W/ GAP
PLASTIC
1-PBT
2-NYLON66
3-NYLON46
4-ABS
COLOR
1-BLACK
2-WHITE
3-GRAY
4-IVORY
LOGO
0-W/O LOGO
1-W/ ZPY
2-W/ UL
3-W/ZPY、UL
GOLD PLATING
1-1.5u "
2-3u "
3-6u "
4-15u "
5-30u "
6-50u "

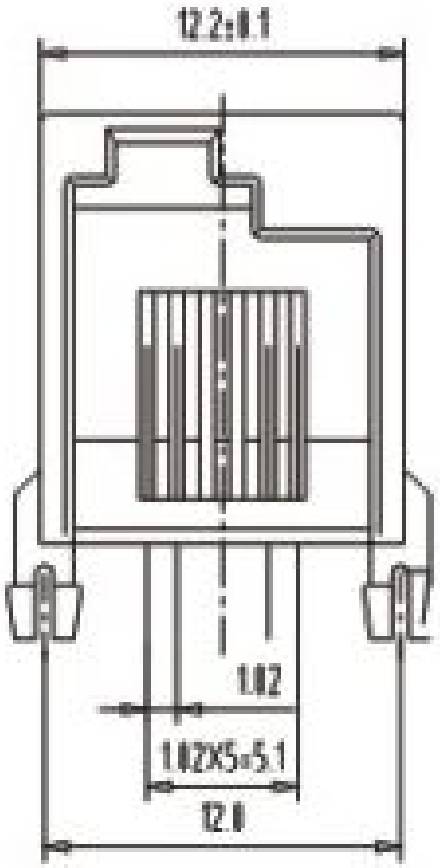
12.2±0.1
1.02
1.02X5=5.1
12.0

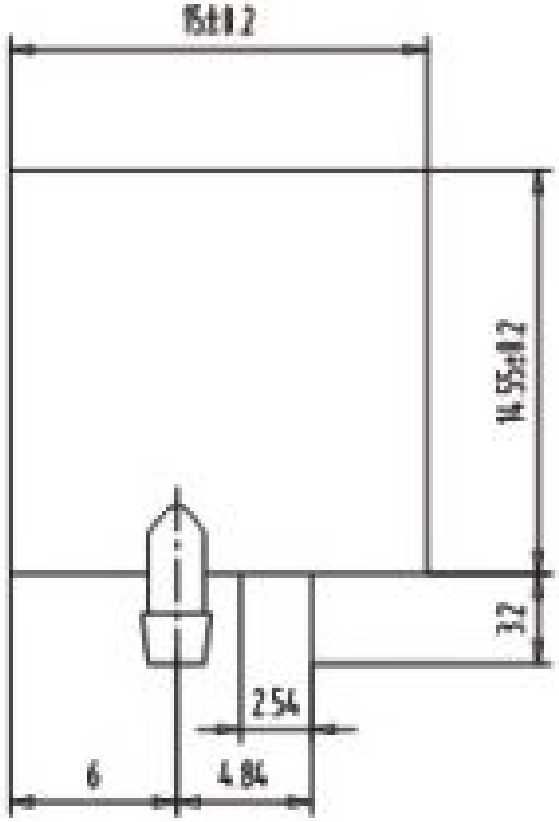
15±0.2
14.55±0.2
3.2
2.54
6
4.84

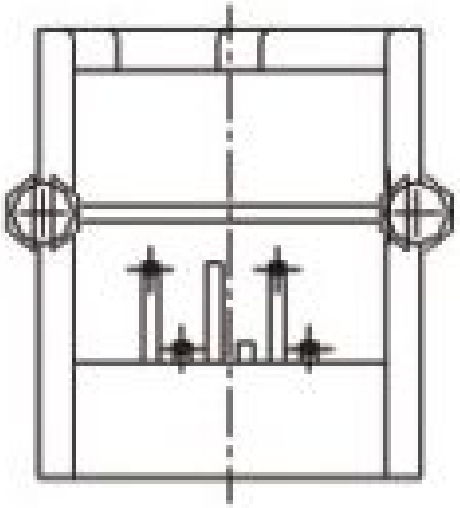

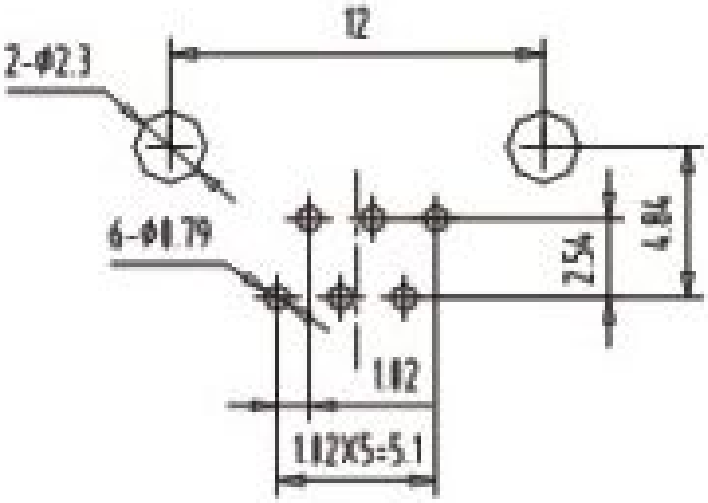
12
2-Φ2.3
6-Φ0.79
2.54
4.84
1.02
1.02X5=5.1

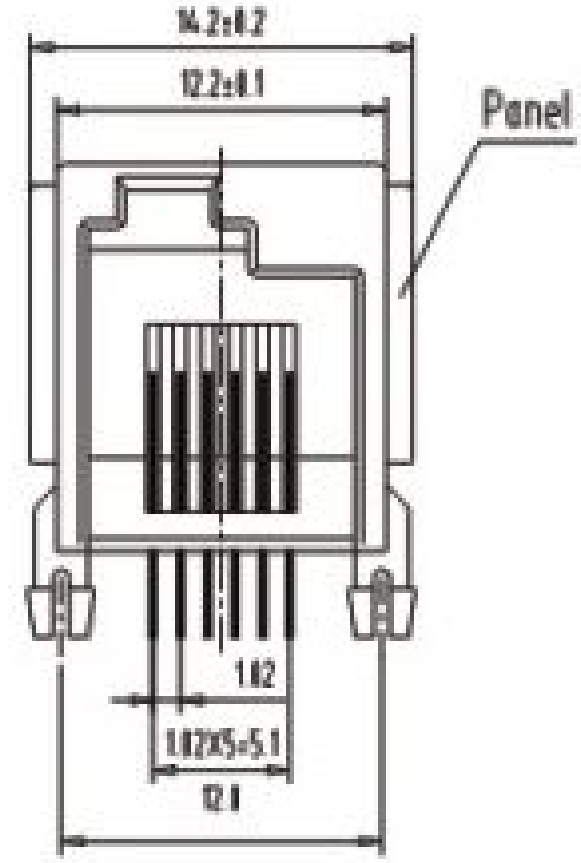
14.2±0.2
12.2±0.1
Panel
1.02
1.02X5=5.1
12.1

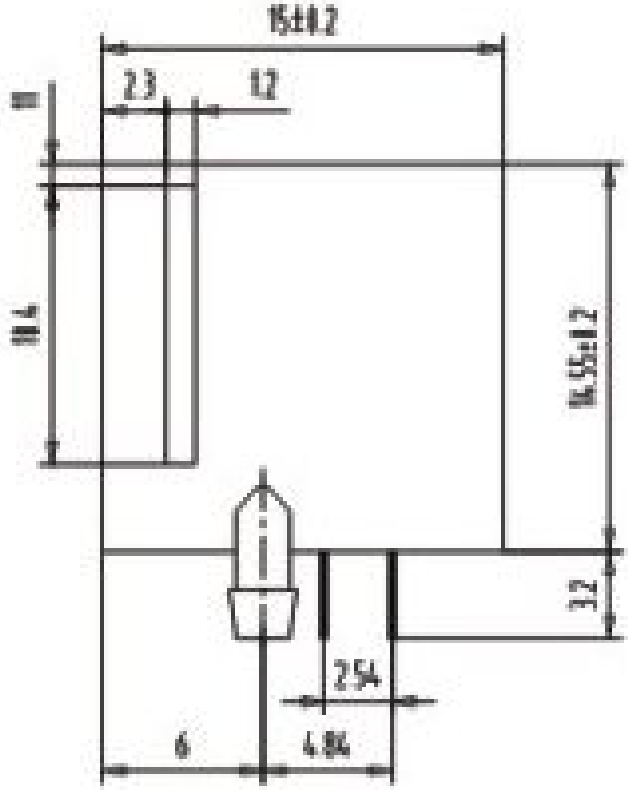
15±0.2
2.3
1.2
1
10.4
16.55±0.2
3.2
2.54
6
4.84

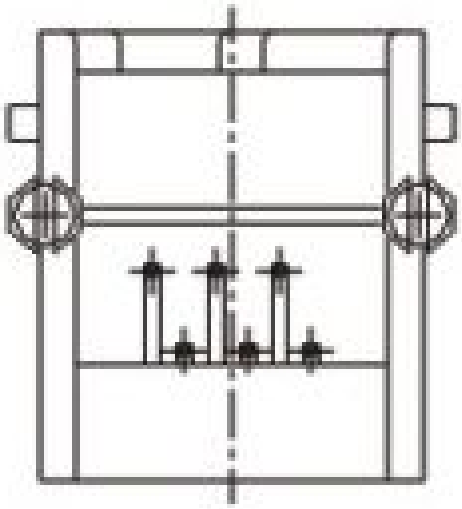

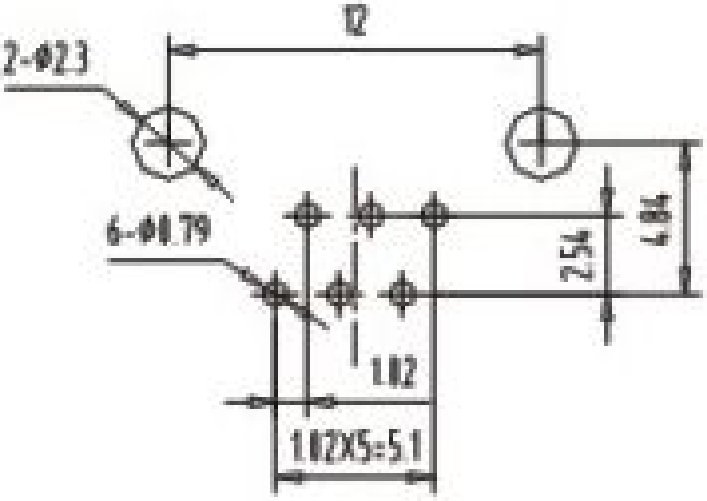
2-Φ2.3
12
6-Φ0.79
2.54
4.84
1.02
1.02X5=5.1