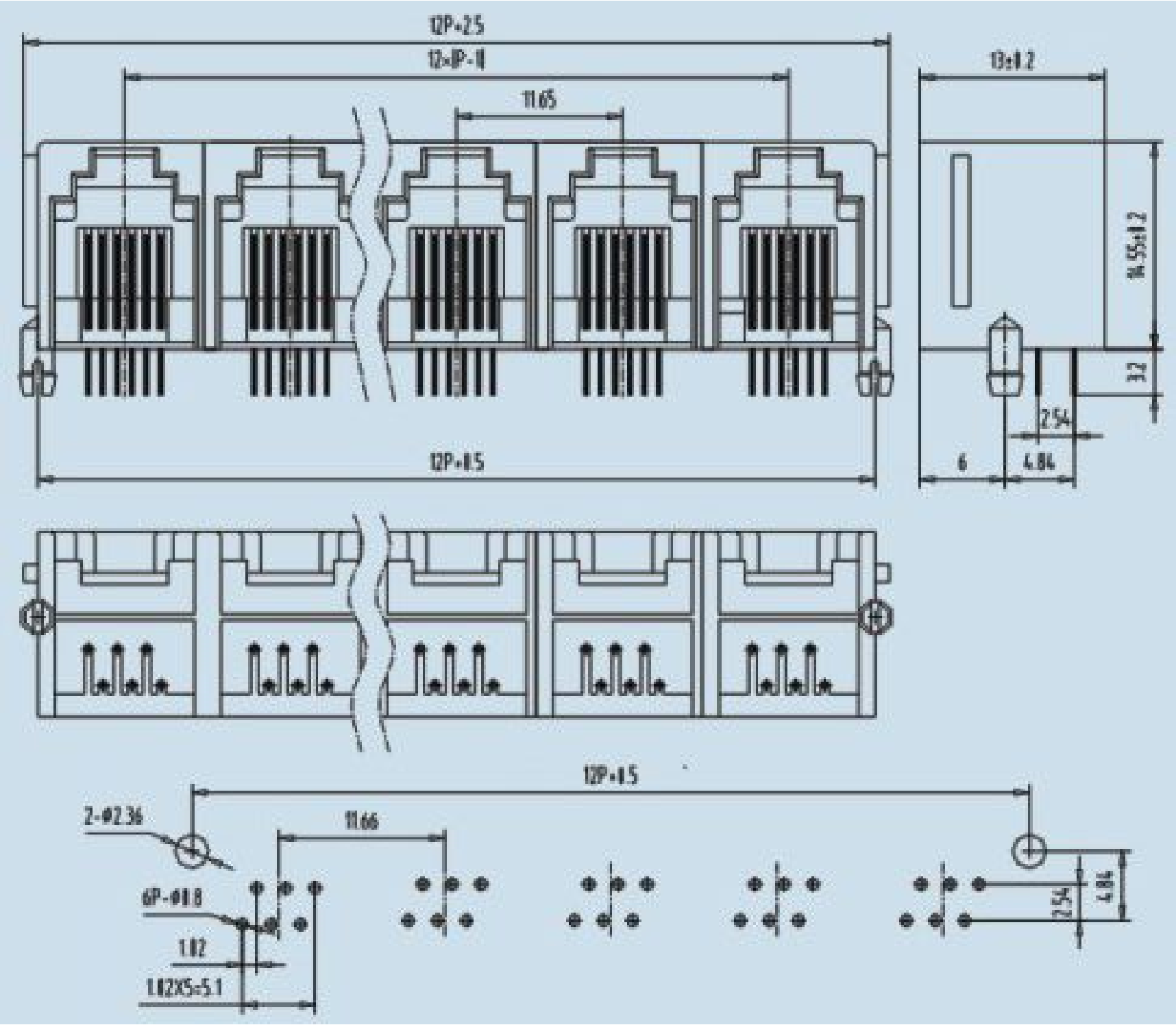
12P+2.5
12×P-1
11.65
13±0.2
14.55±0.2
3.2
2.54
6
4.84
12P+1.5
12P+1.5
2-Ø2.36
11.66
6P-Ø1.8
1.02
1.02X5=5.1
2.54
4.84

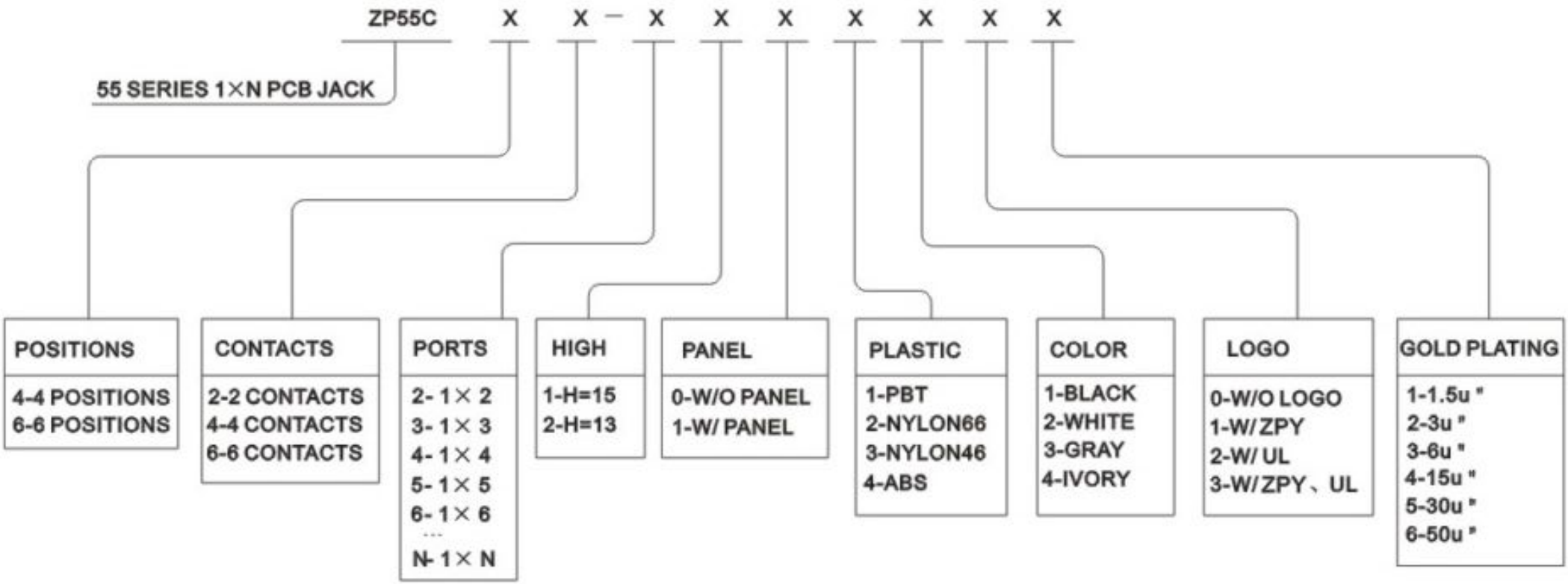
ZP55C X X – X X X X X X X
55 SERIES 1×N PCB JACK
POSITIONS
4-4 POSITIONS
6-6 POSITIONS
CONTACTS
2-2 CONTACTS
4-4 CONTACTS
6-6 CONTACTS
PORTS
2- 1× 2
3- 1× 3
4- 1× 4
5- 1× 5
6- 1× 6

N- 1× N
HIGH
1-H=15
2-H=13
PANEL
0-W/O PANEL
1-W/ PANEL
PLASTIC
1-PBT
2-NYLON66
3-NYLON46
4-ABS
COLOR
1-BLACK
2-WHITE
3-GRAY
4-IVORY
LOGO
0-W/O LOGO
1-W/ ZPY
2-W/ UL
3-W/ ZPY、UL
GOLD PLATING
1-1.5u "
2-3u "
3-6u "
4-15u "
5-30u "
6-50u "

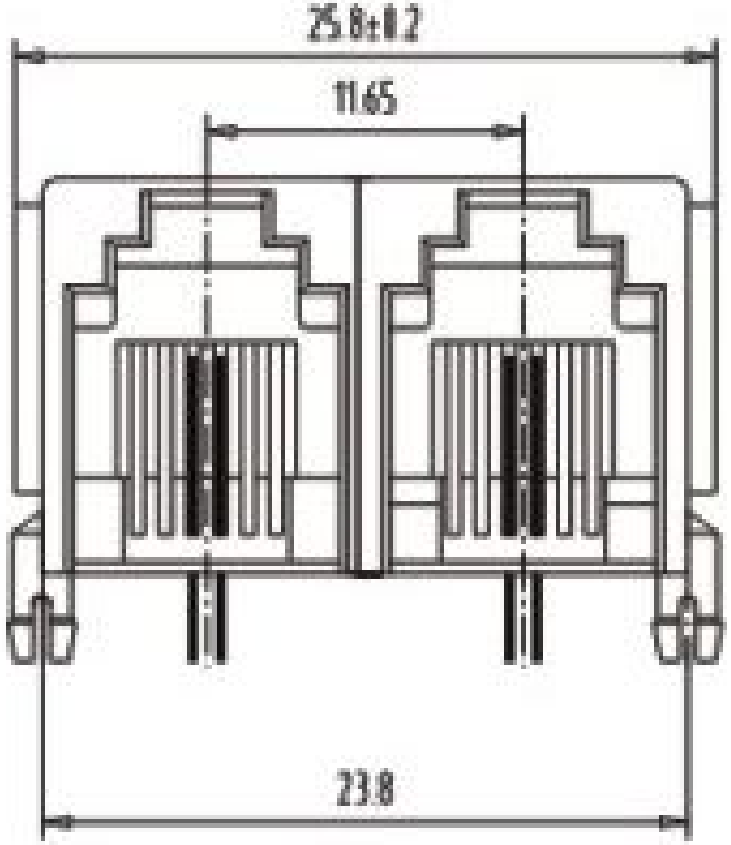
25.8±0.2
11.65
23.8

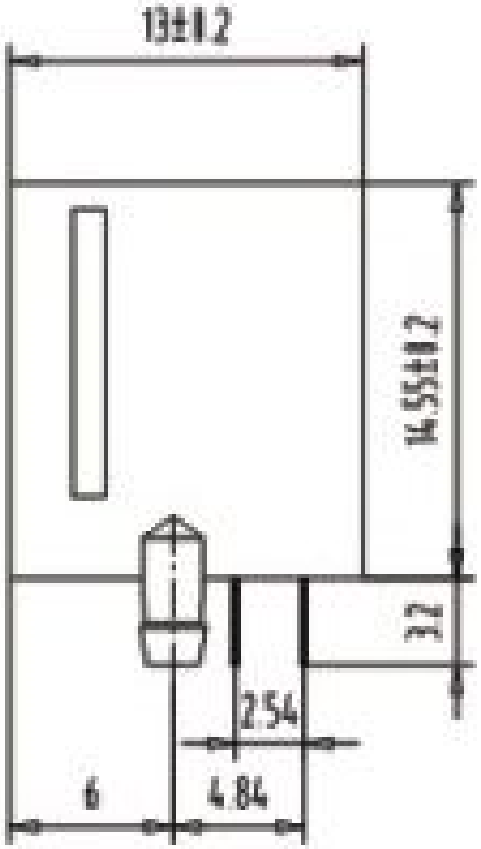
13±0.2
14.55±0.2
3.2
2.54
6
4.84

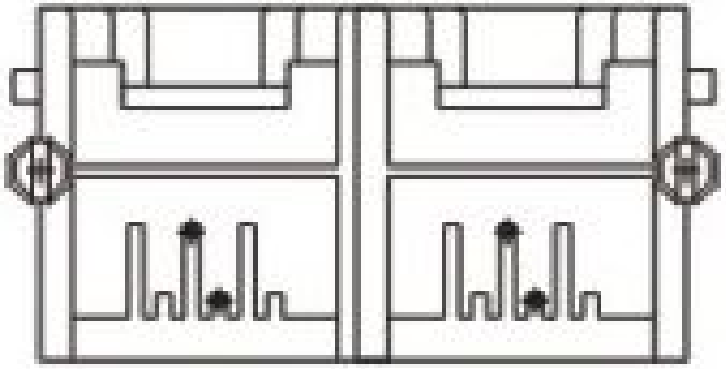

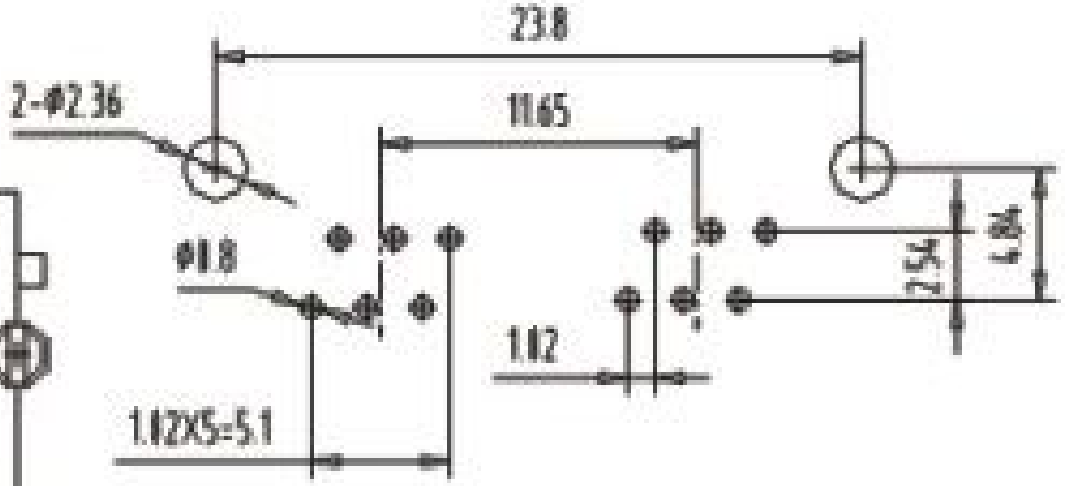
23.8
2-Φ2.36
11.65
Φ1.8
2.54
4.84
1.12
1.12X5=5.1

2-Ø2.36
Ø18
165
102
112X5=51
471
35.2
19.84
471
471
165
35.96
191±0.2
6
4.84
2.54
32
14.55±0.2
Ø14.02